SURAT
ALLUMINIUM COMPANY

HINDVER ALUMINIUM

Grill

Index Box

Sr. No.	Profile Name	Page Number	Remarks
1.	Grill	1 - 7	7

110125

P.T.O.

SURAT
ALLUMINIUM COMPANY

HINDVER ALUMINIUM

GRILL

SEC No. 7120 **Weight :-1.300kg/12'**

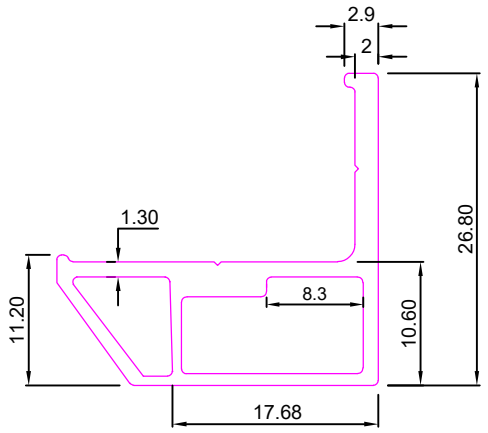

SEC No. 7121 **Weight :-2.300kg/12'**

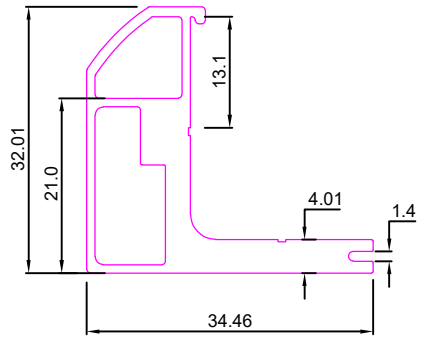

SEC No. 7122 **Weight :-1.400kg/12'**

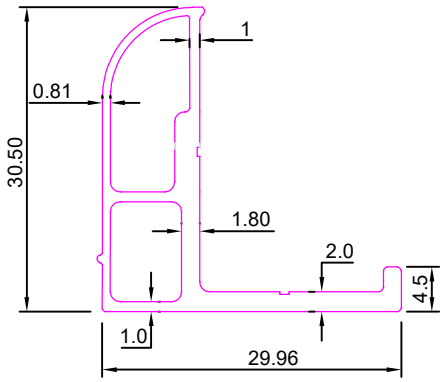

SEC No. 7330 **Weight :-0.585kg/12'**

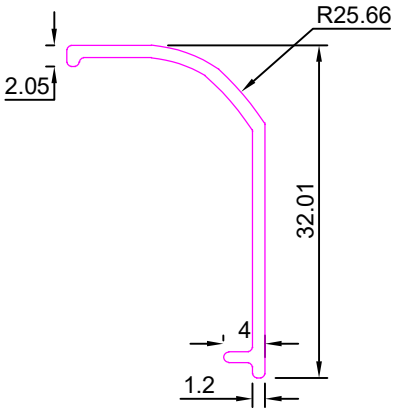

SEC No. 7334 **Weight :-0.430kg/12'**

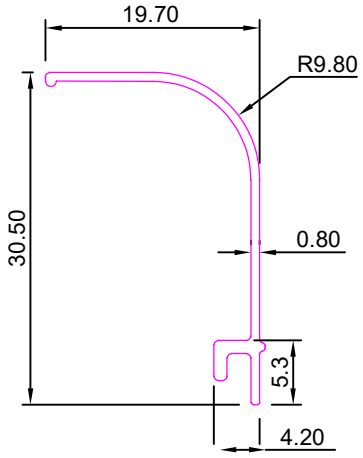

SEC No. 7421 **Weight :-2.000kg/12'**

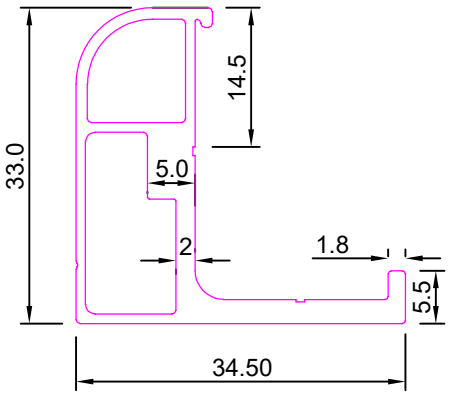

110125

P.T.O.

GRILL

SEC No. 7422 **Weight :-0.550kg/12'**

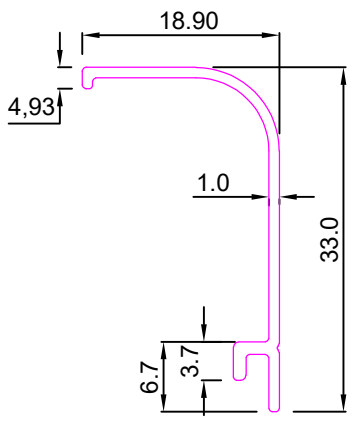

SEC No. 7425 **Weight :-0.320kg/12'**

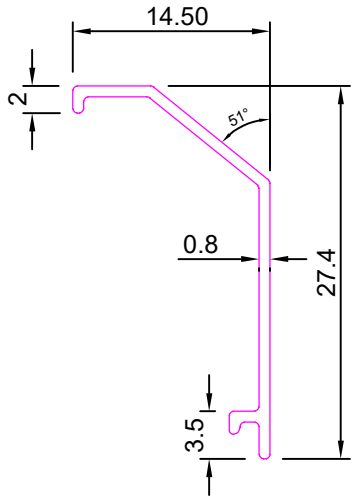

SEC No. 7426 **Weight :-0.600kg/12'**

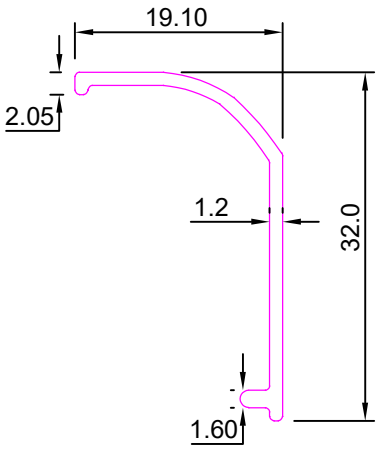

SEC No. 7651 **Weight :-0.660kg/12'**

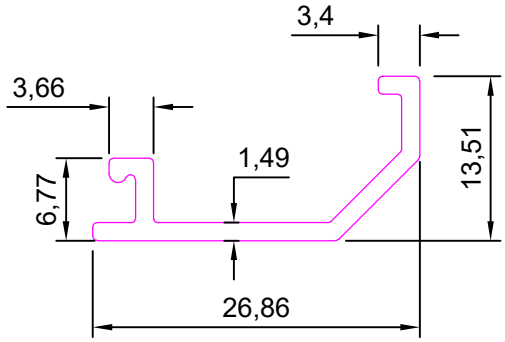

SEC. NO:-7652 **Weight :- 3.800kg/12'**

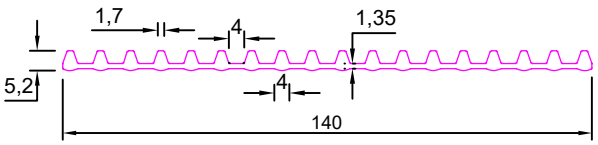

SEC. NO:-7653 **Weight :- 4.235kg/12'**

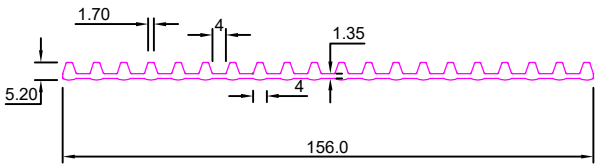

GRILL

SEC. NO:-7654 **Weight :-4.660kg/12'**

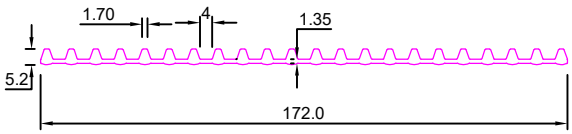

SEC. NO:-7655 **Weight :- 5.090kg/12'**

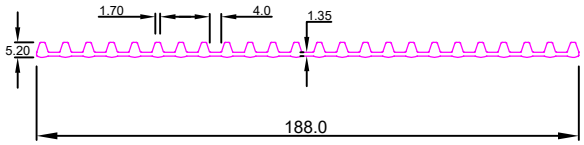

SEC. NO:-7656 **Weight :- 5.735kg/12'**

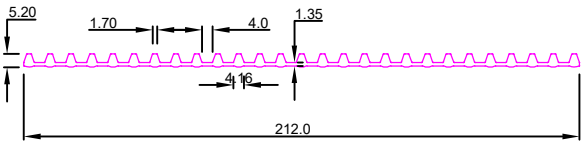

SEC. NO:-7657 **Weight :- 5.950kg/12'**

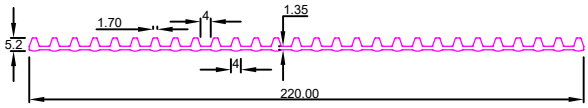

SEC. NO:-7658 **Weight :- 6.380kg/12'**

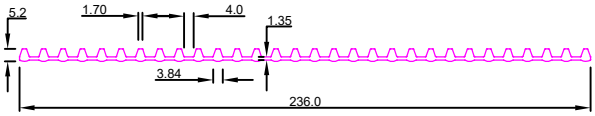

SEC. NO:-7659 **Weight :- 0.660kg/12'**

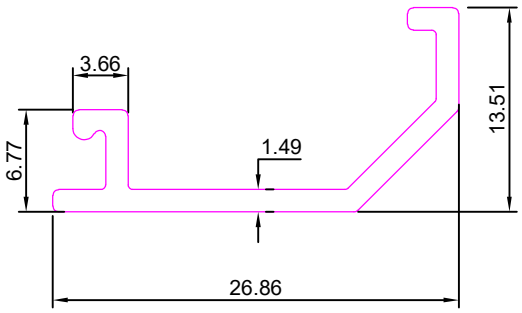

SURAT ALLUMINIUM COMPANY

HINDVER ALUMINIUM

GRILL

SEC. NO:-7660 **Weight :- 0.633kg/12'**

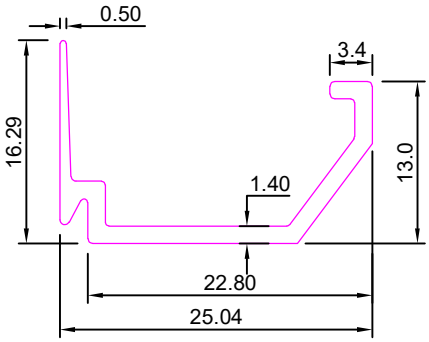

SEC. NO:-7661 **Weight :- 1.477kg/12'**

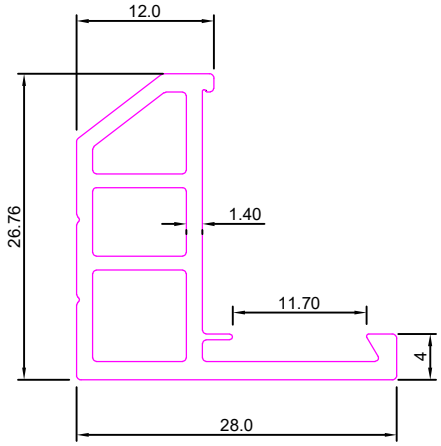

SEC No. 7921 **Weight:-1.635Kg/12'**

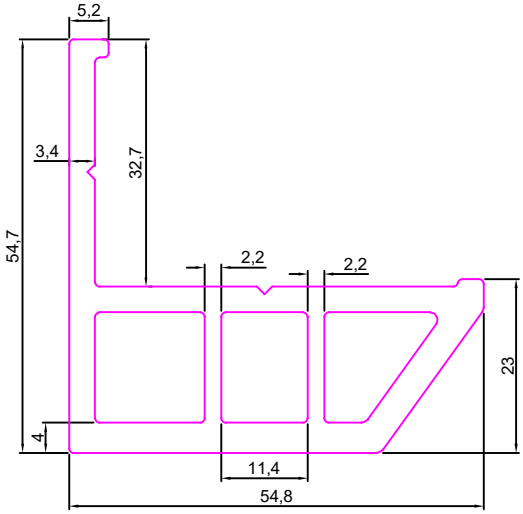

SEC No:-8171 **Weight:2.350Kg/12'**

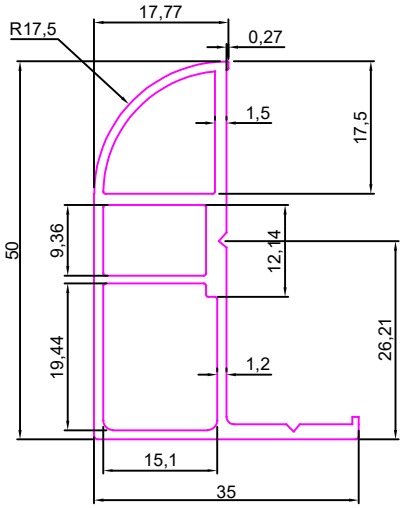

SEC No:-8172 **Weight:0.700Kg/12'**

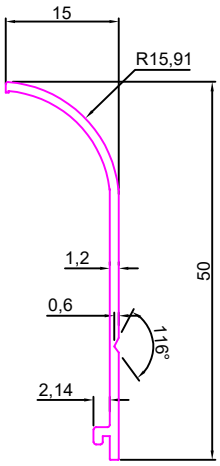

SEC No. :-MA8231 **Weight:-16.00Kg/12'**

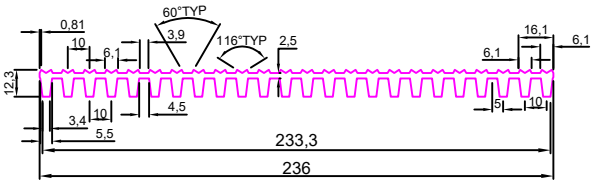

110125

P.T.O.

GRILL

SEC No. :-8283 **Weight:-5.300Kg/12'**

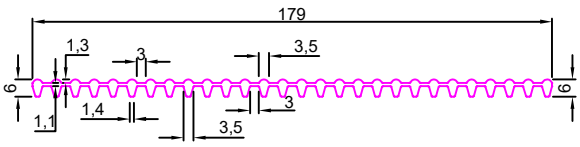

SEC No. :-8284 **Weight:-4.545Kg/12'**

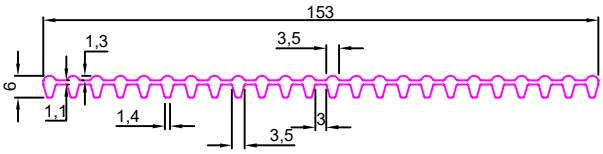

SEC No. VA8308 **Weight:-2.200Kg/12'**

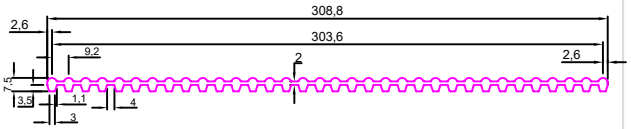

SEC No. VA8309 **Weight:-2.300Kg/12'**

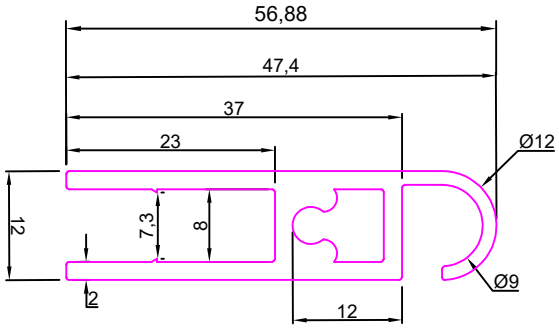

SEC No. VA8310 **Weight:-2.350Kg/12'**

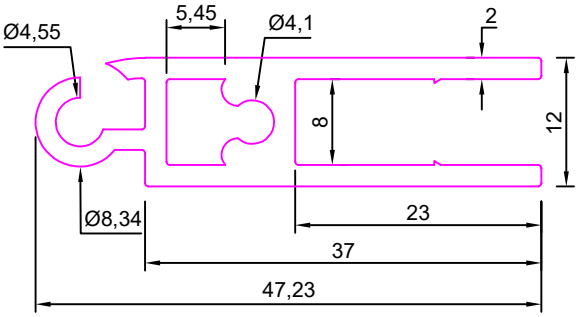

SEC No. VA8311 **Weight:-2.000Kg/12'**

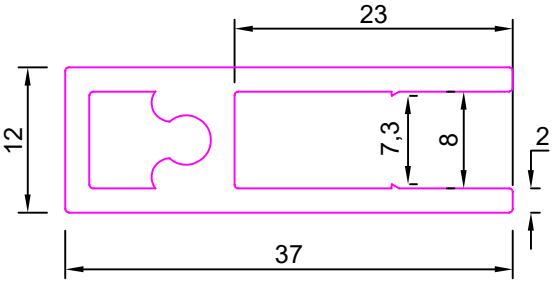

110125

P.T.O.

GRILL

SEC No. VA8312 **Weight:-2.760Kg/12'**

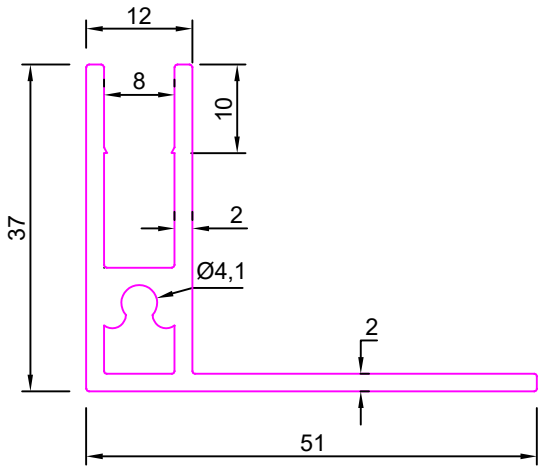

SEC No. VA8313 **Weight:-2.235Kg/12'**

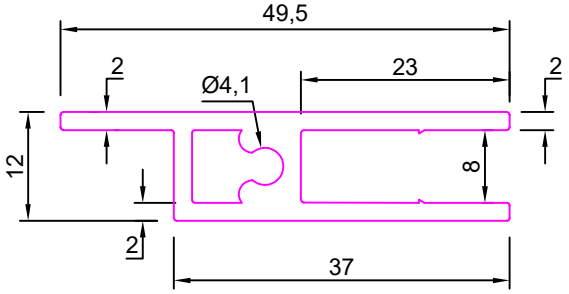

SEC No. 8362 **Weight:-14.850Kg/12'**

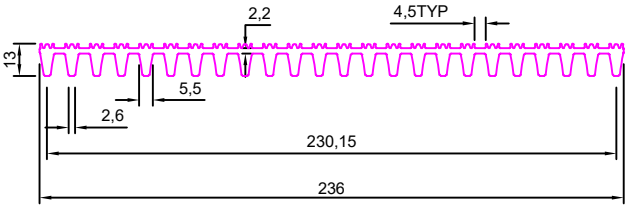

SEC No. 8363 **Weight:-1.840Kg/12'**

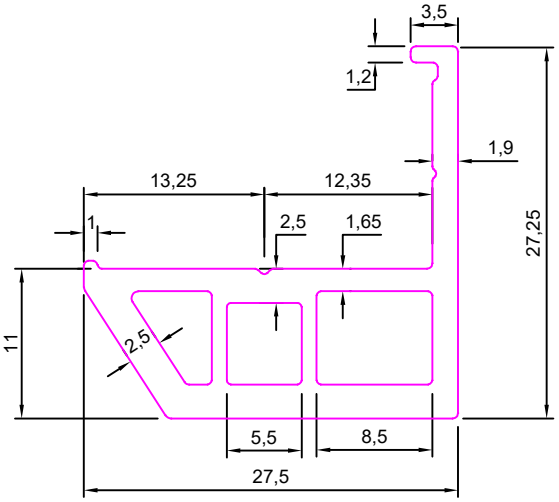

SEC No. GA8408 **Weight:-1.100Kg/12'**

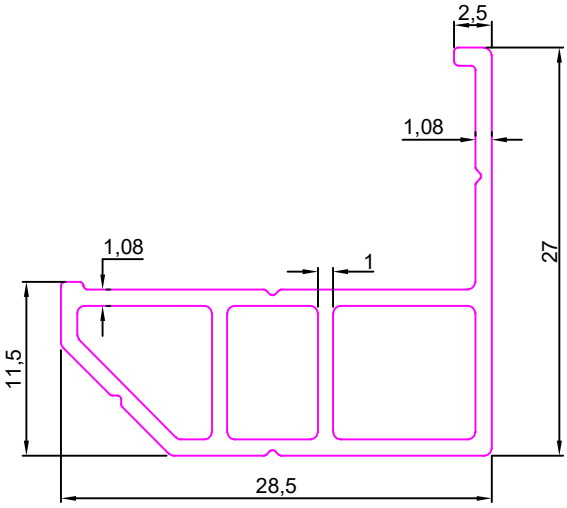

SEC No. 8482 **Weight:-1.300Kg/12'**

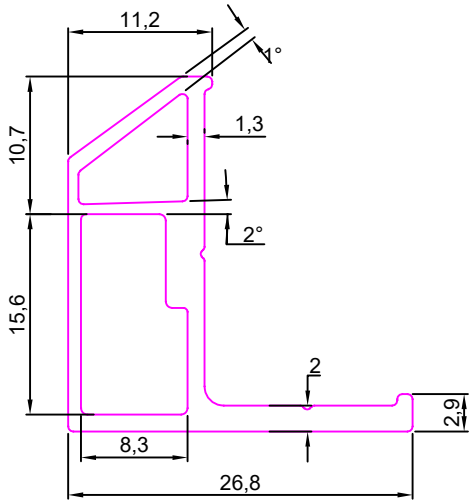

SURAT
ALLUMINIUM COMPANY

HINDVER ALUMINIUM

GRILL

SEC No. GA8515 **Weight:-1.550Kg/12'**

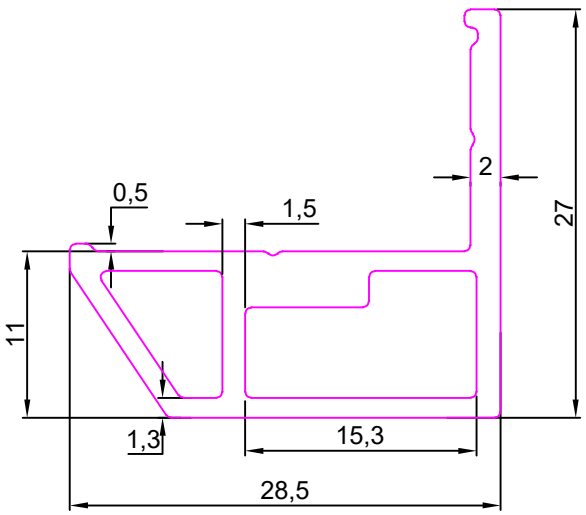

SEC No. GA8516 **Weight:-0.400Kg/12'**

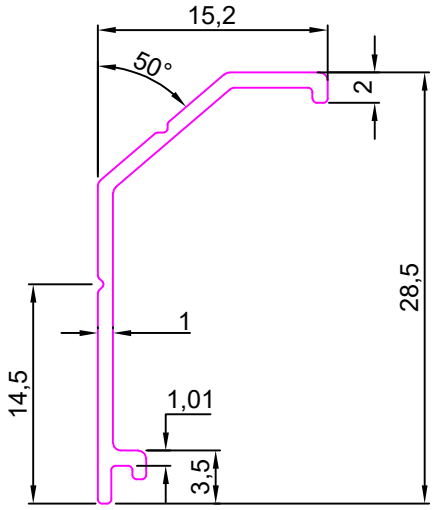

SEC No. 8652 **Weight:1.450Kg/12'**

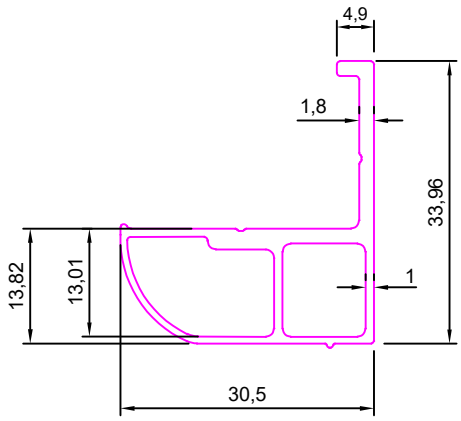

CAD BY- Ajay Pratap Yadav

110125